2/2 WAY THREAD STAINLESS STEEL PNEUMATIC ANGLE SEAT VALVE

Ordering Code

KLJZF - □ - □ □ □ - □ - □

- **KLJZF** — Specification Code **KLJZF:** KAILING Angle seat Valve
- □ — Orifice Size (mm) DN15~100
- □ — Actuator Material **Blank:** Polyamide **SS:** Stainless steel
- □ — Valve Body Material **Blank:** SS304 **SS316:** SS316
- □ — Mounting **F:** Flang type **Q:** Tri-clamp connection **W:** Welding model **Blank:** Thread model
- □ — **Blank:** Single-action normally closed **2:** Double-acting normally closed **3:** Single-action normally closed (Water hammer free, low pressure) **4:** Double-acting normally closed (Water hammer free) **5:** Double-acting normally open **6:** Double acting (lowe starting pressure)
- □ — Accessories **P:** With positioner **L:** Limit switch

Features of Angle Seat Valve

- With valve open or closed position display.
- Pneumatic external pilot, can increase the service life, maintenance-free.
- There is a self-adjusting seal gland between the overflow port and the slider to improve the sealing performance.
- Y-type structure design enabling large flow (compared with globe valve), compact structure, fast response.

Specification

Medium Temperture	-10℃~+180℃
Ambient Temperture	-10℃~+60℃
Max. Working Pressure	1.6MPa
Working Medium	Netral and aggressive liquid, gases
Working Pressure	0.4~0.8MPa
Port Size	DN15-DN100
Body Material	SS304、SS316
Sealing Material	PTFE

Notice

Flow direction below the seat (direction A)

1. Valves with flow direction below the seat(direction A) ensure long service life.
2. Valves used fo liquid media are waterhammer-free.

Valves with dirction B

1. provide high sealing integrity when media is steam or air.
2. There is no waterhammer free function when media is liquid.

Installation & Maintenance

- The applicable safety regulations must be observed
- Make sure the pipe line is clean.
- Insallation according to requirement. check the flow direction before installation.
- Connect the valve to the pipeline, and remove the actuator only if the user requires it.
- Shut off the fluid and control air supply and reduce pressure in the piping system before opening or servicing the angle valve.

Flange Angle Seat Valve

Plastic actuator

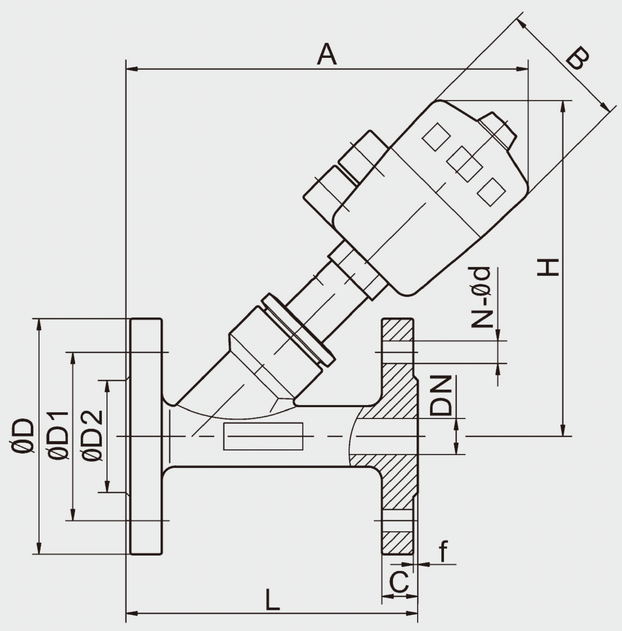

Dimension Sheet

DN	L	C	f	D	D1	D2	H	A	B	N-Φd	Actuator
15	131	11	1.7	90	65	43	155	185	66.5	4-Φ14	Φ50
20	131	14	1.7	100	75	53.8	160	185	66.5	4-Φ14	Φ50
25	141	14	2	110	85	63.5	197	220	82.5	4-Φ14	Φ63
32	150	13	1.7	130	100	74	195	225	82.5	4-Φ18	Φ63
40	178	14	2	140	110	83.5	203	240	82.5	4-Φ18	Φ63
50	195	18	2	154	125	97	229	275	103	4-Φ18	Φ80
65	230	18	2	185	145	115	315	320	126	4-Φ18	Φ100
80	250	18	2	195	160	130	330	330	126	8-Φ18	Φ100
100	280	18	2	215	180	150	350	360	156	8-Φ18	Φ125

SS actuator

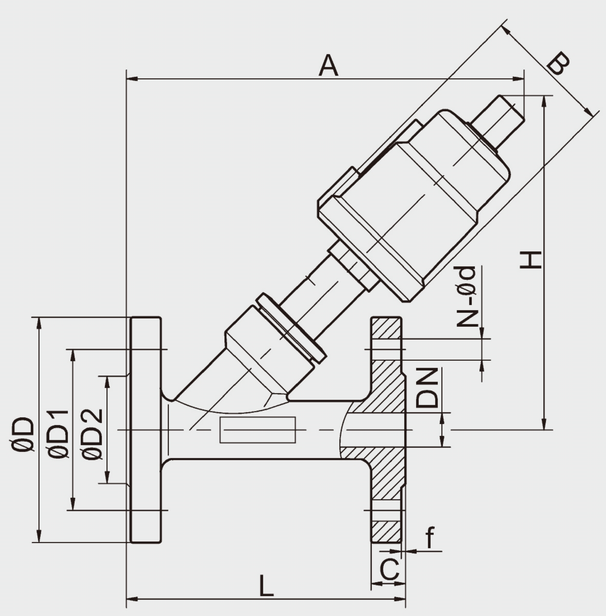

DN	L	C	f	D	D1	D2	H	A	B	N-Φd	Actuator
15	131	11	1.7	90	65	42.5	157	180	61.5	4-Φ14	Φ50
20	136	11.5	1.7	100	75	53.5	161	188	61.5	4-Φ14	Φ50
25	140	13.3	1.7	110	85	63	173	198	61.5	4-Φ14	Φ50
32	150	13	1.7	130	100	74	198	220	75.5	4-Φ18	Φ63
40	180	14	1.7	140	110	82.5	205	236	75.5	4-Φ18	Φ63
50	195	15	1.7	154	125	96	208	245	75.5	4-Φ18	Φ63
65	230	18	2	185	145	115	315	320	126	4-Φ18	Φ80
80	250	18	2	195	160	130	330	330	126	8-Φ18	Φ100
100	280	18	2	215	180	150	350	360	156	8-Φ18	Φ100