PNEUMATIC/ELECTRIC BUTTERFLY VALVE

D671F-10ZB-DN50

D671X-10ZT-DN50

D671X-10PB-DN50

D671X-10UP-DN50

D971X-10CT-DN100

D971X-10UP-DN50

D941X-10ZT-DN200

Ordering Code

D - 6 - 7 - 1 - F - 10 - Z - T - DN15 - AT063D - □

D	6	7	1	F	10	Z	T	DN15	AT063D	□
Butterfly Valve Code **D:** Butterfly Valve **BD:** Insulation Butterfly Valve **TLD:** Desulfurization Butterfly Valve **DH:** Check Butterfly Valve **DKS:** Fast Butterfly Valve **FDBD:** Square Shutter Butterfly Valve	Drive Mode **Blank:** Manual **3:** Gear **6:** Pneumatic **9:** Electric	Connection Type **7:** Wafer **4:** Flange **8:** Quick Clamp **6:** Welding	Structure Type **1:** Midline **2:** Double Eccentric **3:** Three Eccentric **4:** Variable Eccentric **5:** Uniaxial Eccentricity	Sealing Material **X:** Rubber **F:** PTFE **J:** Natural Rubber **H:** Stainless Steel **T:** Copper alloy (To be customized) **Y:** Hard-alloy (To be customized) ↑ Rubber **X1:** NBR **X2:** EPDM **X3:** VITON	Pressure Difference Range **10:** 1.0MPa **16:** 1.6MPa **25:** 2.5MPa **40:** 4.0MPa **Soft seal's highest pressure:** 1.6MPa	Body Material **Z:** Cast iron **C:** Cast Steel **P:** SS304 **UP:** UPVC **CP:** CPVC **R:** SS316 **Q:** Nodular cast iron	Disc Material **T:** Ductile iron **B:** SS304	Port Size DN50~ DN300	Actuator Code **Pneumatic:** AT063-270 **Electric switch type:** KLST-02~60 **Electric passive contact:** KLST-05S~60S **Electric 1K, 5K potentiometer:** KLST-05R~60R **Electric adjustment type:** KLST-05T~60T	Other accessories need to be marked Solenoid Valve Limit switch Air Source Treatment Unit Locator

Normal sealing's working Temp.

X1 NBR：-10~90℃
X2 EPDM：-10~120℃
X3 VITON：-10~150℃
F PTFE：-20~180℃
H Stainless Steel：-20~400℃

Specification

Pneumatic Butterfly Valve	Electric Butterfly Valve
Air Pressure：0.4~0.8MPa	Electric Actuator Power：AC380,AC220 50/60HZ,AC110,DC24
Control Medium：Neutral gas, air	Electric Actuator Input：4-20mA.DC
Ambient Temperature：-20℃~+60℃	
Manufacturing Standard：GB, ISO, ANSI, DIN	

PNEUMATIC/ELECTRIC BUTTERFLY VALVE

Overall Dimension

Pneumatic/ Electric Wafer Butterfly Valve

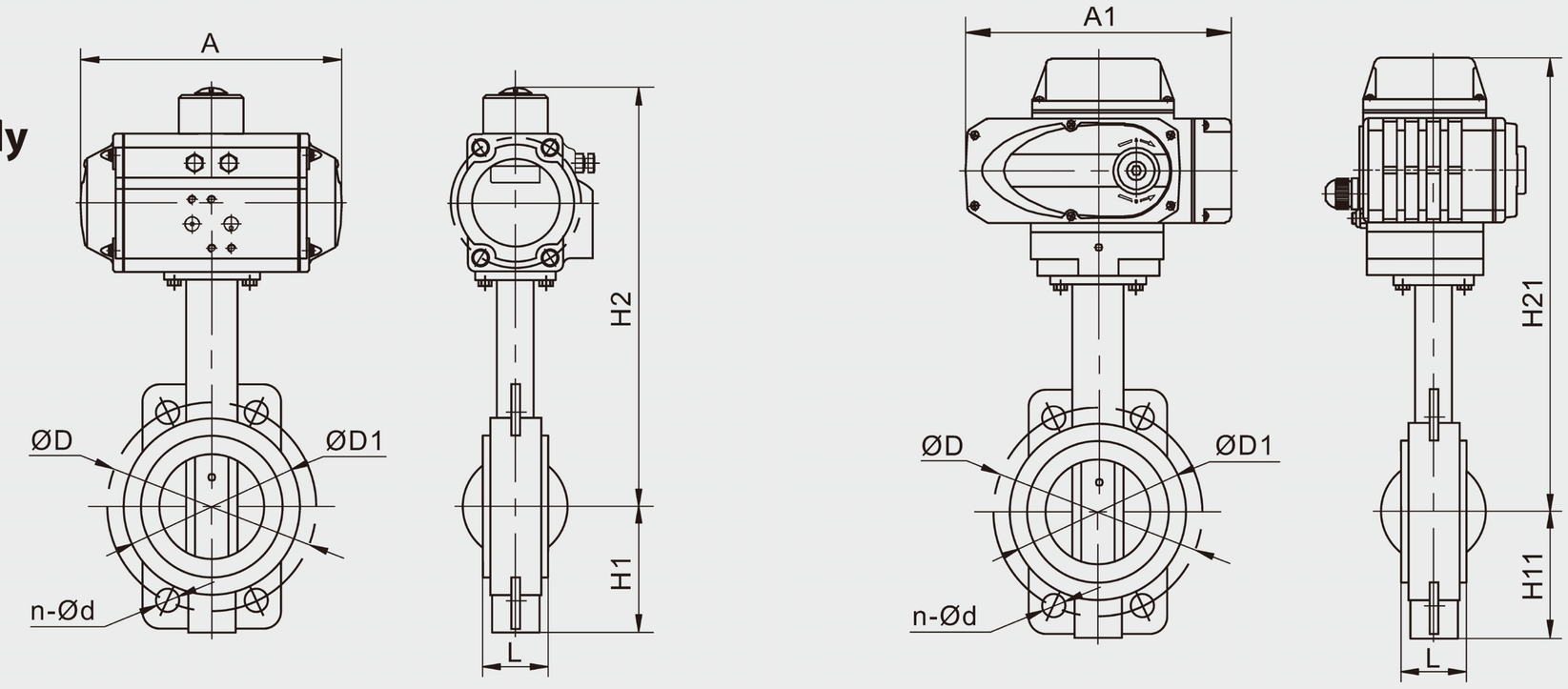

Dimension Sheet

DN	L	H1/H11	H2/H21	A/A1	D	D1	N-Φd	Pneumatic Actuator	Electric Actuator
40	33	62	253/282	146/160	100	105	4-18	AT050D	KLST-05
50	42	80	276/296	167/160	120	99	4-23	AT063D	
65	44.5	89	290/300	167/160	136	118	4-26.5		
80	45.5	95	296/306	167/160	160	132	8-18		
100	52	114	332/344	213/198	185	156	4-24.5	AT075D	KLST-10
125	54.2	127	358/370	250/198	215	184	4-23	AT088D	
150	56	139	383/405	268/255	238	211	4-25	AT100D	KLST-20
200	60.5	175	457/479	349/255	295	265	4-25	AT125D	KLST-40
250	65.5	203	510/532	418/255	357	319	4-29	AT145D	KLST-60
300	77	242	577/490	450/280	407	370	4-29	AT160D	KLST-100

Overall Dimension

Pneumatic/Electric Flange Butterfly Valve

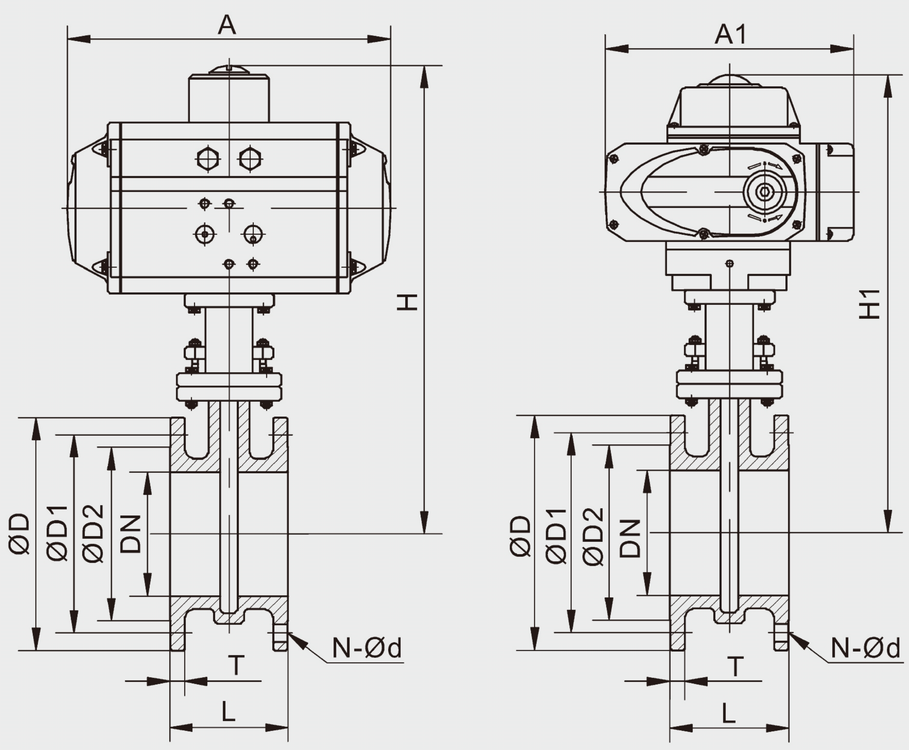

Dimension Sheet

DN	L	D	D1	D2	T	A/A1	H/H1	N-Φd	Pneumatic Actuator	Electric Actuator
50	108	165	125	102	20	213/160	270/266	4-18	AT075D	KLST-05
65	112	185	145	122	20	213/198	280/308	4-18		KLST-10
80	114	200	180	133	22	213/198	300/325	4-18		
100	127	220	180	158	24	250/198	330/345	8-18	AT088D	
125	130	250	210	184	26	268/255	368/370	8-18	AT100D	KLST-20
150	140	285	240	212	28	349/255	438/436	8-22	AT125D	
200	152	340	295	268	28	418/255	488/465	8-22	AT145D	KLST-40
250	165	395	350	320	30	450/255	540/495	12-22	AT160D	KLST-60
300	178	445	400	370	30	450/280	580/535	12-22	AT160D	KLST-100
350	190	505	460	430	30	518/280	644/567	16-22	AT190D	KLST-200
400	216	585	515	484	32	518/280	658/580	16-26	AT190D	KLST-200

PNEUMATIC/ELECTRIC BUTTERFLY VALVE

Overall Dimension

Pneumatic/Electric PVC Butterfly Valve

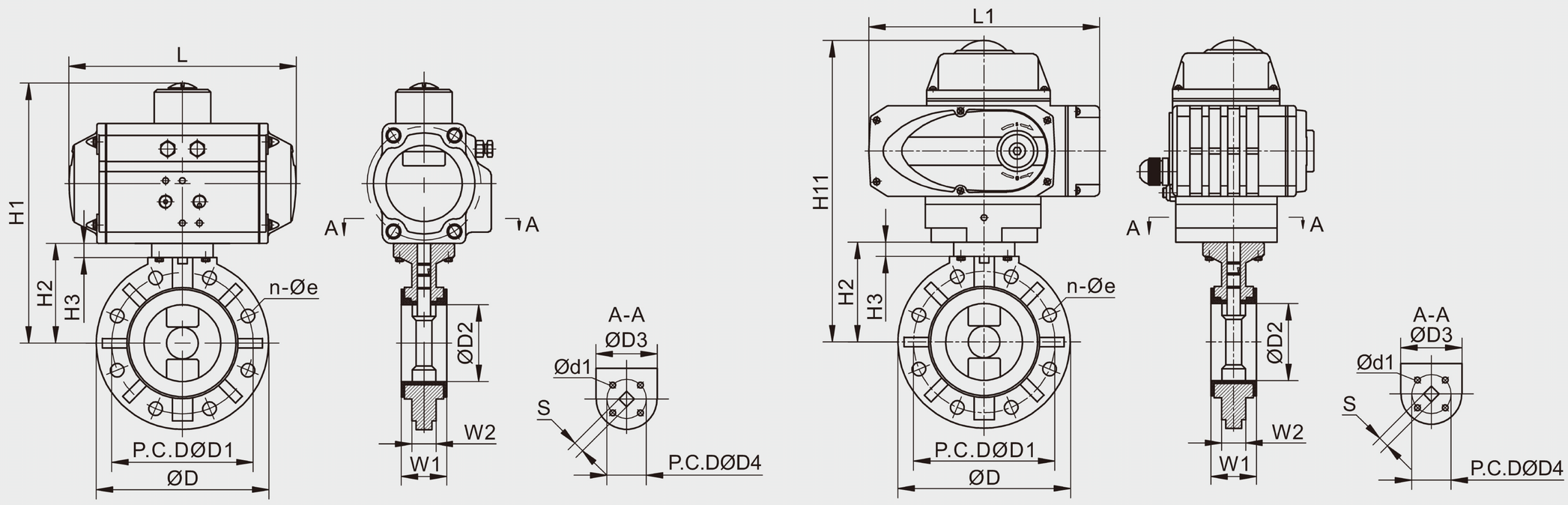

Dimension Sheet

Item \ Diameter		DN50	DN65	DN80	DN100	DN125	DN150	DN200
JIS	D1	120	140	150	175	210	240	290
	n-Φe	4-19	4-19	8-19	8-19	8-19	8-23	12-23
ANSI	D1	120.5	139.5	152.5	190.5	216	241.5	298.5
	n-Φe	4-19	4-19	4-19	8-19	8-19	8-23	8-23
DIN	D1	125	145	160	180	210	240	295
	n-Φe	4-18	4-18	4-18	8-18	8-18	8-18	8-23
D		160	180	196	228	258	287	344
D2		56.5	69.5	79.5	102.5	130	152	203
D3		105	120	123	135	164	169	201
H2		103	113	115	135.5	165	177	210
H3		13	13	13	13	15	19	21
W1		43	46	49	54	64	70	88
W2		29	31	31	40	50	54	69
d1		6.5	6.5	8.5	8.5	8.5	10.5	10.5
D4		50	50	70	70	70	102	102
S		14	14	17	17	17	22	27
H1/H11		230/231	240/241	255/275	275/295	312/360	360/372	410/405
L/L1		167/160	167/160	167/198	213/198	250/255	268/255	349/255
Pneumatic Actuator		AT063D			AT075D	AT088D	AT100D	AT125D
Electric Actuator		KLST-05			KLST-10		KLST-20	KLST-40