2/2 WAY THREAD STAINLESS STEEL PNEUMATIC ANGLE SEAT VALVE

Ordering Code

KLJZF - □ - □ □ □ - □ - □

- **KLJZF** — Specification Code **KLJZF:** KAILING Angle seat Valve
- □ — Orifice Size (mm) DN15~100
- □ — Actuator Material **Blank:** Polyamide **SS:** Stainless steel
- □ — Valve Body Material **Blank:** SS304 **SS316:** SS316
- □ — Mounting **F:** Flang type **Q:** Tri-clamp connection **W:** Welding model **Blank:** Thread model
- □ — **Blank:** Single-action normally closed **2:** Double-acting normally closed **3:** Single-action normally closed (Water hammer free, low pressure) **4:** Double-acting normally closed (Water hammer free) **5:** Double-acting normally open **6:** Double acting (lowe starting pressure)
- □ — Accessories **P:** With positioner **L:** Limit switch

Features of Angle Seat Valve

- With valve open or closed position display.
- Pneumatic external pilot, can increase the service life, maintenance-free.
- There is a self-adjusting seal gland between the overflow port and the slider to improve the sealing performance.
- Y-type structure design enabling large flow (compared with globe valve), compact structure, fast response.

Specification

Medium Temperture	-10℃~+180℃
Ambient Temperture	-10℃~+60℃
Max. Working Pressure	1.6MPa
Working Medium	Netral and aggressive liquid, gases
Working Pressure	0.4~0.8MPa
Port Size	DN15-DN100
Body Material	SS304、SS316
Sealing Material	PTFE

Notice

Flow direction below the seat (direction A)

1. Valves with flow direction below the seat(direction A) ensure long service life.
2. Valves used fo liquid media are waterhammer-free.

Valves with dirction B

1. provide high sealing integrity when media is steam or air.
2. There is no waterhammer free function when media is liquid.

Installation & Maintenance

- The applicable safety regulations must be observed
- Make sure the pipe line is clean.
- Insallation according to requirement. check the flow direction before installation.
- Connect the valve to the pipeline, and remove the actuator only if the user requires it.
- Shut off the fluid and control air supply and reduce pressure in the piping system before opening or servicing the angle valve.

Thread Angle Seat Valve

Plastic actuator

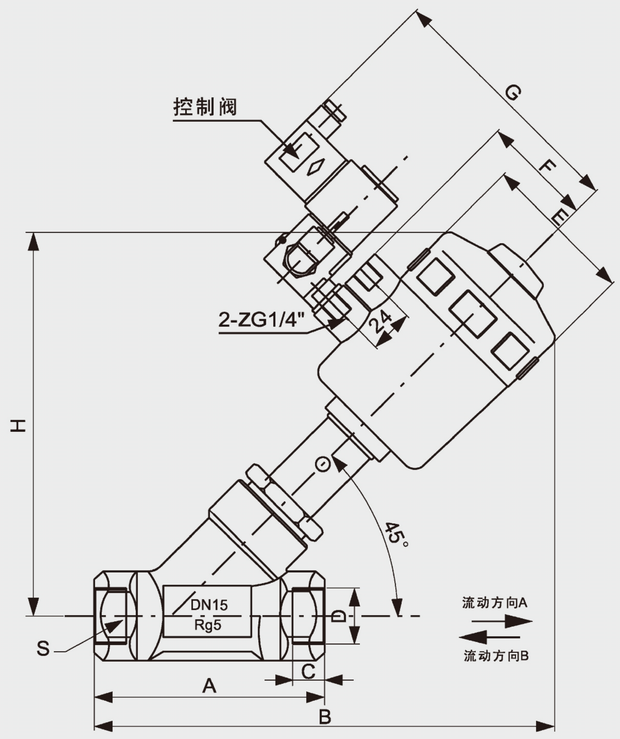

Dimension Sheet

Type	Actuator (mm)	D	A	B	C	ΦE	F	G	H
DN15	50	ZG1/2"	85	170	16	64	44	112	140
DN20	50	ZG3/4"	95	180	16	64	44	112	145
DN25	63	ZG1"	105	215	19	80	52	120	175
DN32	63	ZG1¹/4"	117	220	21	80	52	120	185
DN40	63	ZG1¹/2"	129	230	21	80	52	120	185
DN50	80	ZG2"	149	265	25	100	60	120	220
DN65	100	ZG2¹/2"	155	252	26	126	73	140	300
DN80	100	ZG3"	220	368	30	126	73	140	340
DN100	125	ZG4″	235	420	35	168	97	164	395

SS actuator

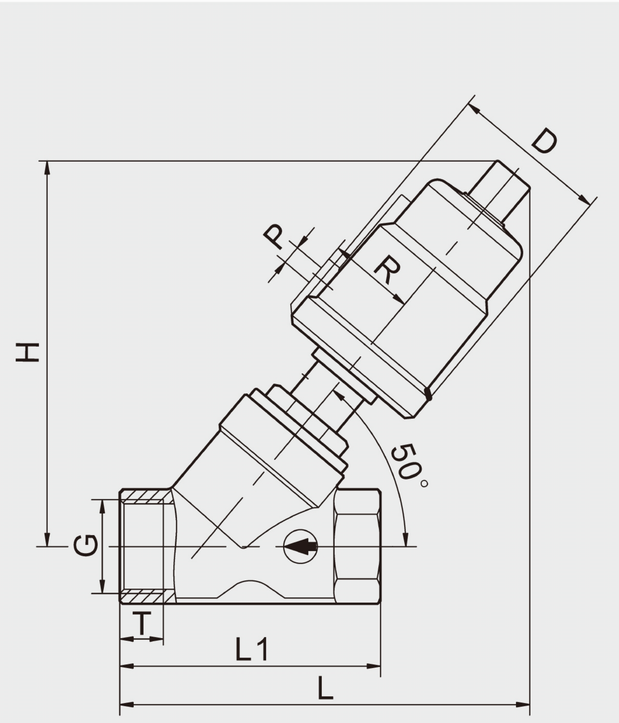

Type	Actuator (mm)	D	R	P	G	H	L	L1	T
DN15	50	62	33.5	ZG1/8"	ZG1/2"	126	137	68	13
DN20	50	62	33.5	ZG1/8"	ZG3/4"	138	144	75	16
DN25	50	62	33.5	ZG1/8"	ZG1"	148	156	90	16
DN32	63	76	42	ZG1/8"	ZG1¹/4"	182	188	110	21
DN40	63	76	42	ZG1/8"	ZG1¹/2"	182	190	116	21
DN50	63	76	42	ZG1/8"	ZG2"	195	205	136	22
DN65	80	96	52	ZG1/8"	ZG2¹/2"	280	252	185	30
DN80	100	114	63	ZG1/8"	ZG3"	320	280	220	33
DN100	100	114	63	ZG1/8"	ZG4"	350	300	235	35